paperInside.com

park heroes

☆ flash ☆

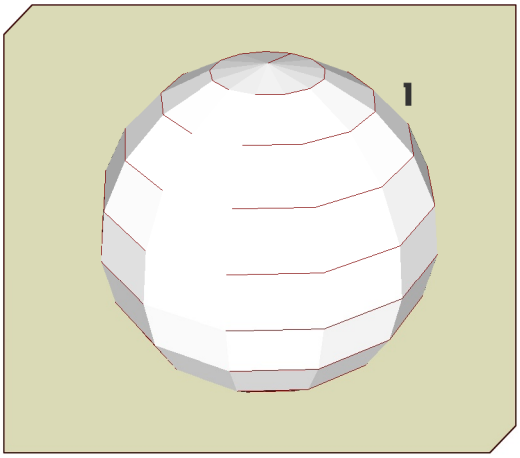

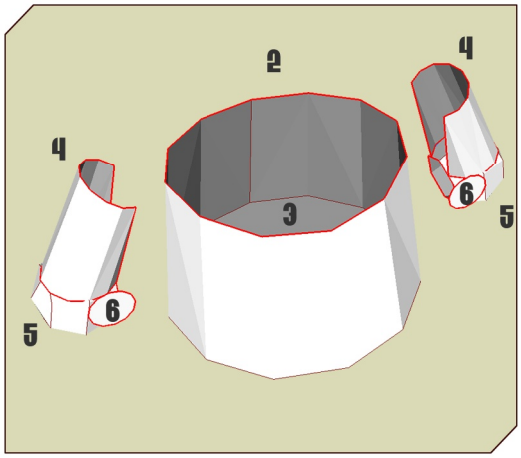

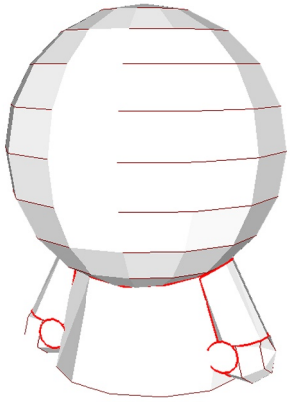

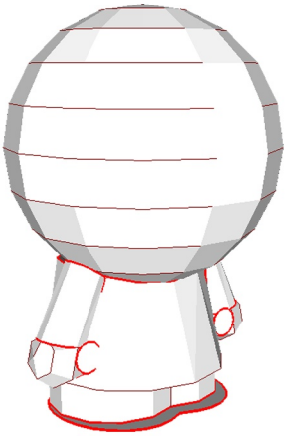

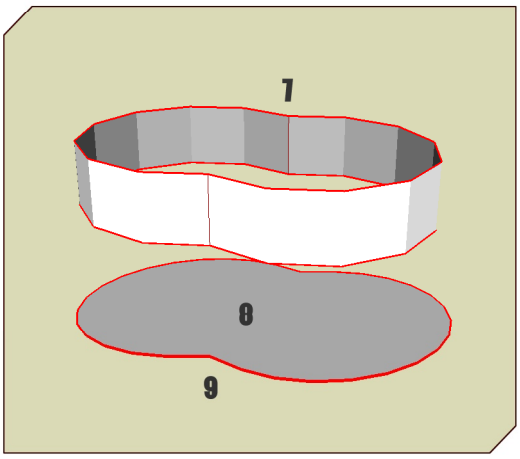

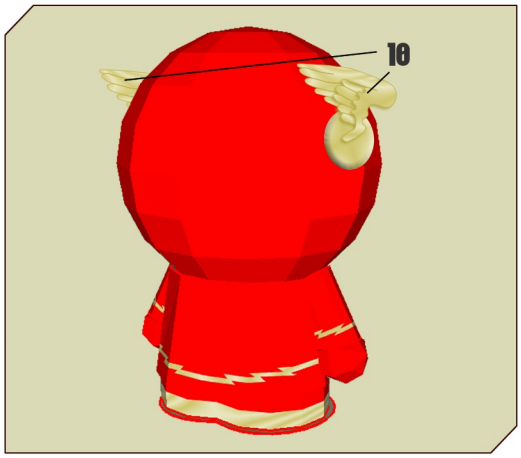

☆2008

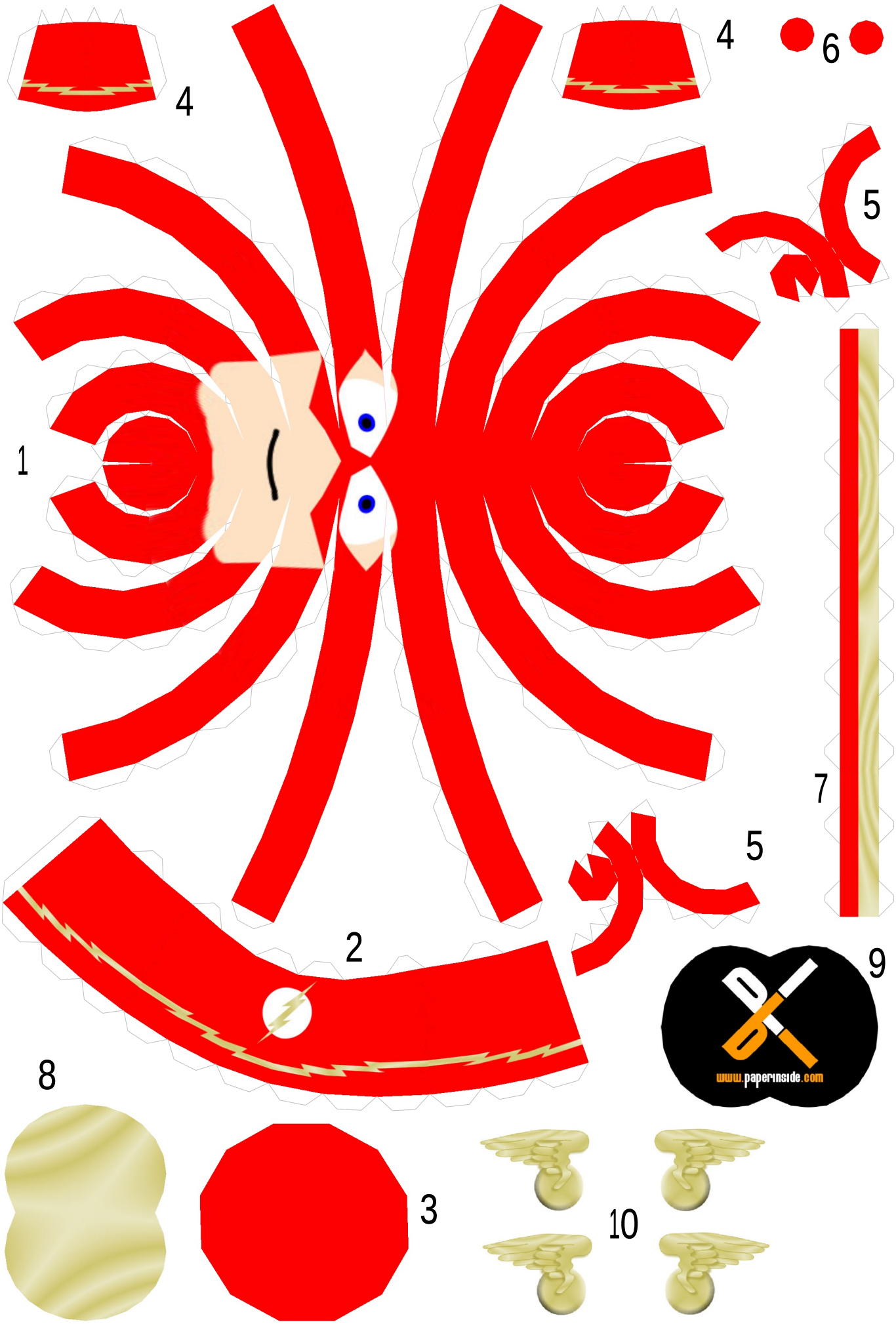
4
4
6
5
1
7
5
2
9
www.paperinside.com
8
3
10