paperInside.com

park heroes

☆ superman ☆

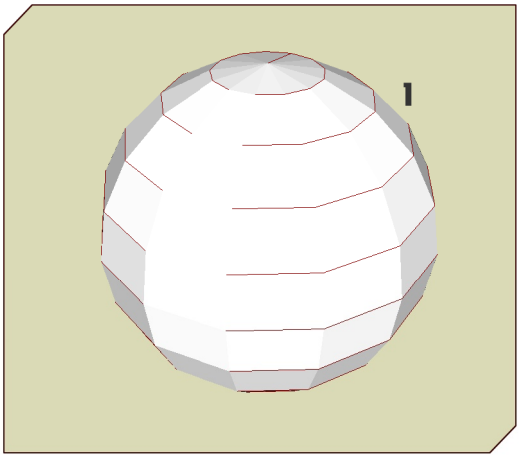

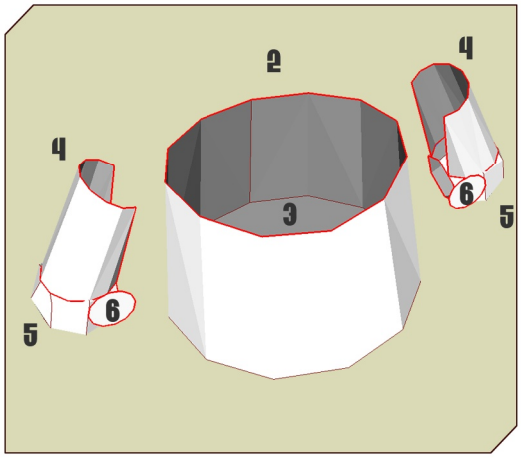

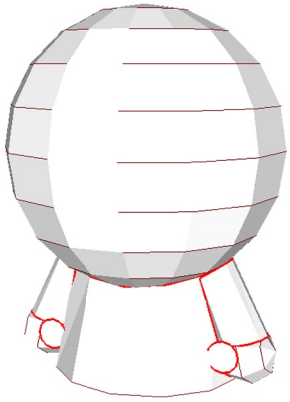

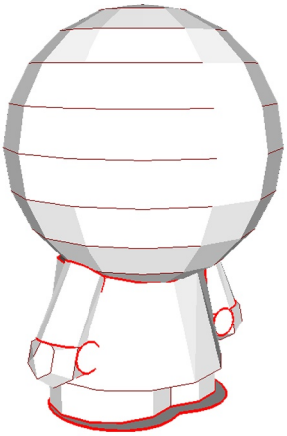

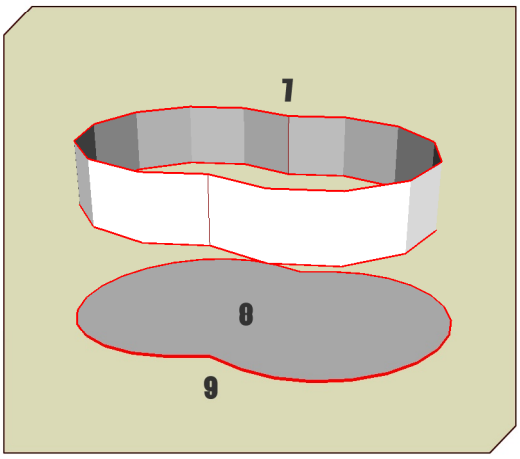

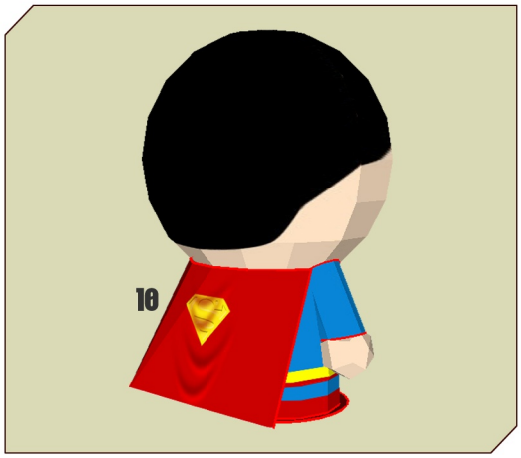

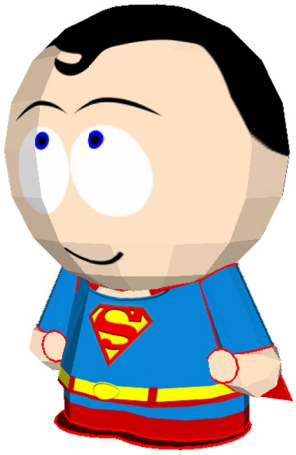

☆2008

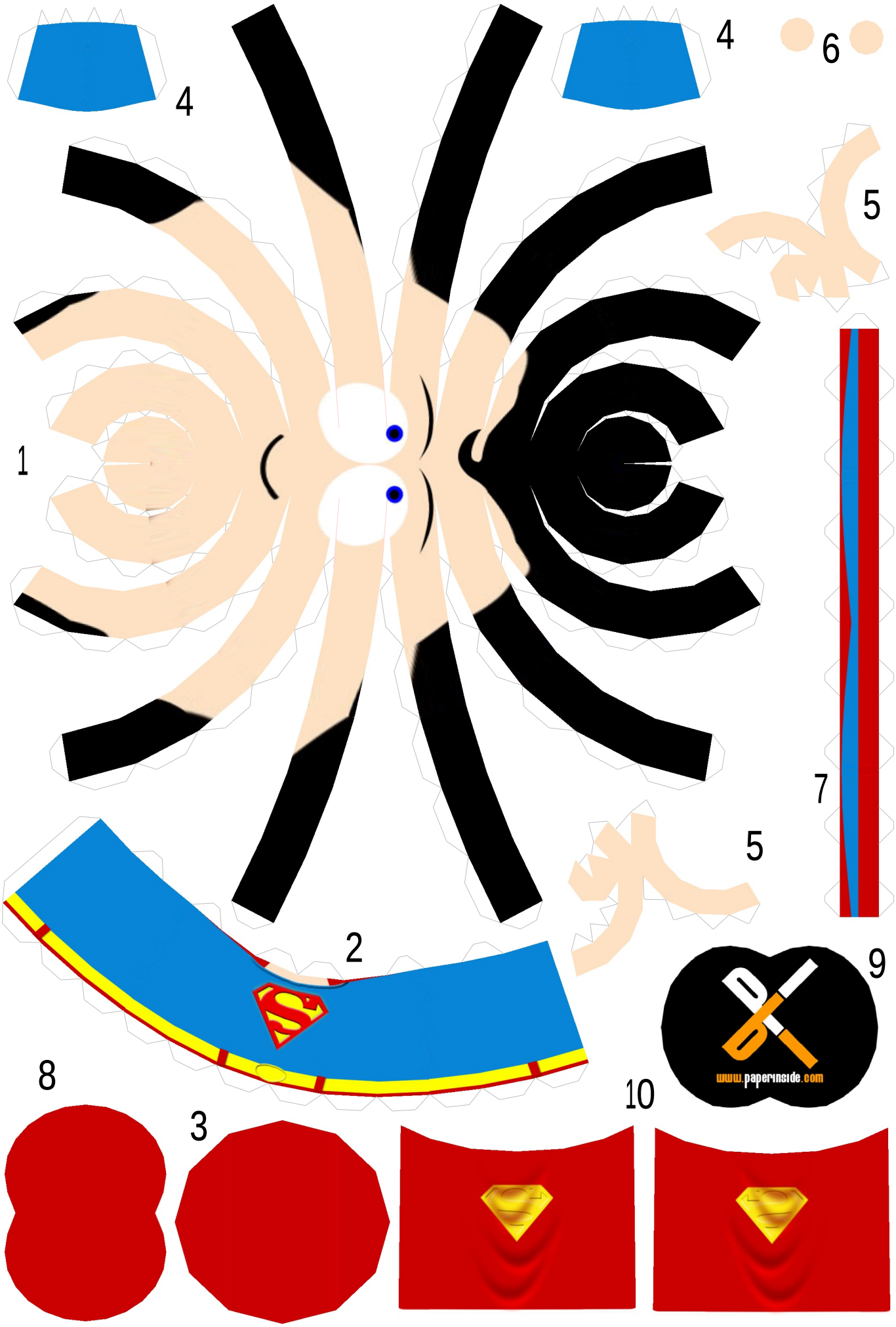
4
4
6
5
1
7
5
2
9
8
3
10
www.paperinside.com